Chemistry Curriculum: Business & Industry Conc. 2017-18

Additional requirements:

ARTS elec	3 hrs
CHEM 401 (Seminar)	1 hr
Conc electives (in blue)	15 hrs
CMPS 120 or 161	3 hrs
COMM 211	3 hrs
+ECON 201 or 202[MBA]	3 hrs
ENGL 101/102 or 121H/122H	6 hrs
ENGL 230 or 231 or 232	3 hrs
Foreign Lang	6 hrs
Free electives	12 hrs
GBIO 151/152	4 hrs
History elec	3 hrs
LS 102	1 hrs
SE 101 or elec*	2 hrs
Social Science elec	3 hrs

+cannot count toward conc electives

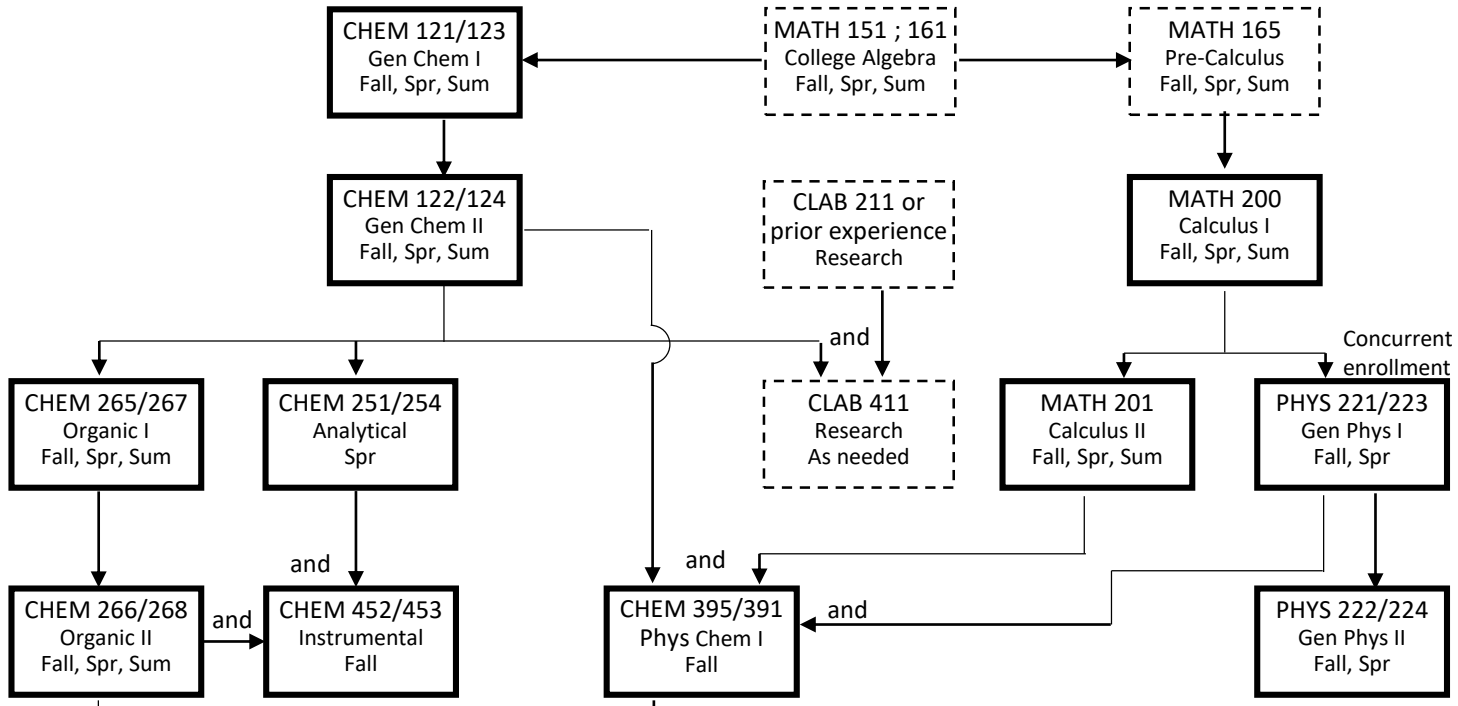

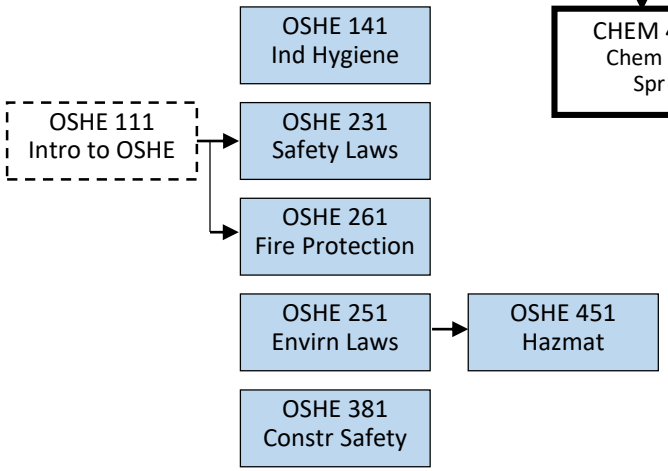

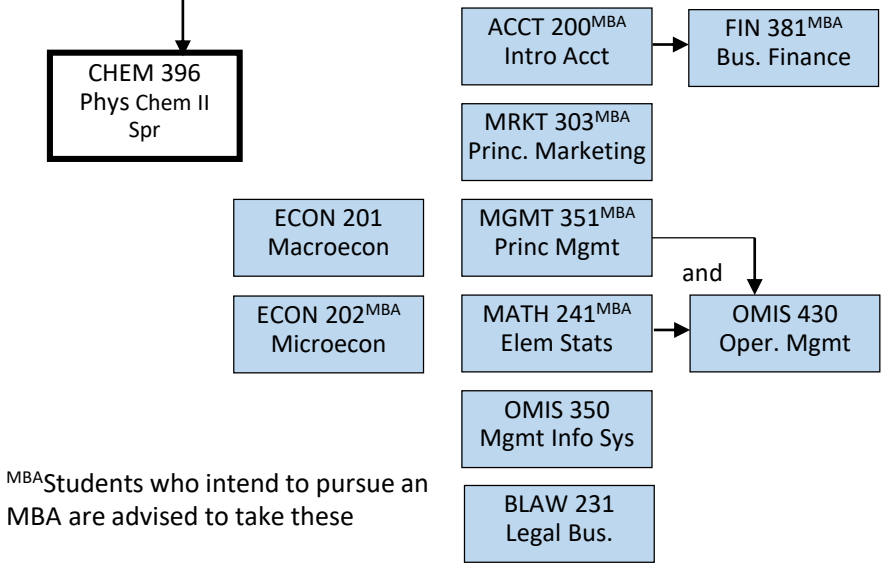

[MBA]Students who intend to pursue an MBA are advised to take these

Disclaimer: in case of a discrepancy, the University General Catalogue supersedes this chart